plus Opto
THE OPTOELECTRONIC SPECIALISTS
T +44 (0) 1942 671122 **F** + (0) 1942 671133 **E** sales@plusopto.co.uk **W** www.plusopto.co.uk
B13 Derwent Court William Way Moss Industrial Estate Leigh Lancashire WN7 3PT

SEAM Semiconductors

PF5000x12-300SL5050RGBW

Full Colour RGBW Flexible LED Strip

Features

- Full colour flexible LED light source
- Four in one 5050 RGBW LED emitters
- Easy to cut at 50 / 100mm intervals
- Wide 120° angle of emission
- Low power, low heat, long life
- 3M Adhesive backing tape

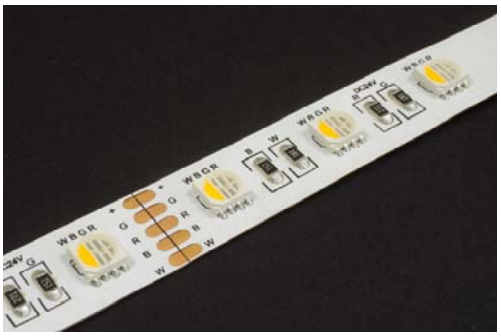

Applications: POS Display equipment & lighting

Configuration

Parameter	Rating	Unit
LED emitters PLCC 5050	300 pcs 5.0x5.0mm	TOTAL / reel
LED pitch	16.66	mm
Dimensions	5000x12mm cuttable at 50mm (12v) 100mm (24v) intervals	
Termination	5x Flying wire leads 200mm long	
Connection	5 wire: Red, Green, Blue, White with Common +ve (Black wire)	

Electro-optical characteristics Ta=25°C

Part Numbers	CCT/nm	QTY/M	Luminous Flux (LM/M)	Current/M (12VDC)	Current/M (24VDC)	Rated Power (max W/M)
PF5000x12-300RGBW-24v/IP20	3000K	(60pcs)	356	0.266A	0.14A	3.2W
	620-630		98	0.283A	0.28A	3.4W
PF5000x12-300RGBW-24v IP62	520-535		362	0.258A	0.26A	3.1W
PF5000x14-300RGBW-24v IP68	460-475		90	0.233A	0.116A	2.8W
	7000K Balanced		906	1.6A	1A	19.2W

Operating Voltage	12v	24v	Vdc
Operating Temp	-20 to +45°C		°C
Storage Temp	-0 to +55°C		°C

Dimensions

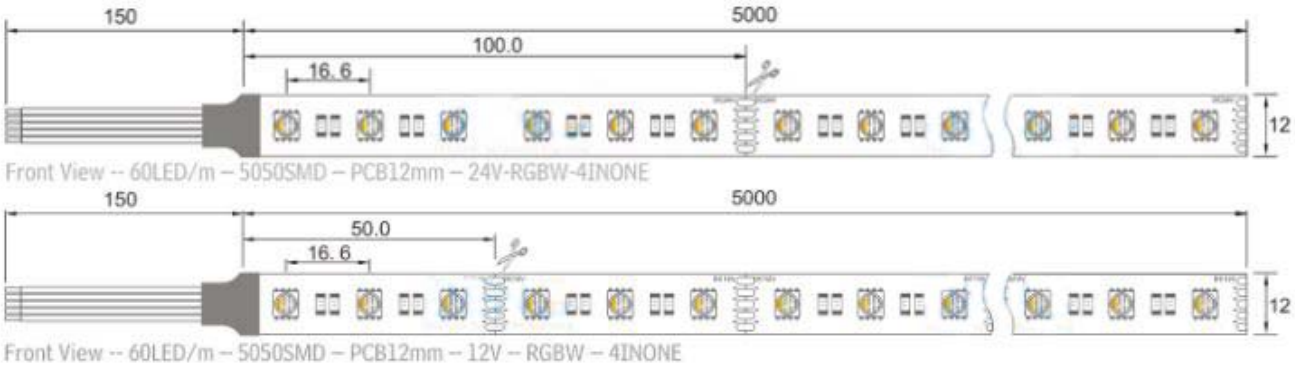

Handling notes:

Ensure that the correct low voltage dc power supply is matched to the flexible strip specification

Avoid repeated bending of the strip as this will damage the circuit and components and please observe the maximum bend radius of 30mm

Avoid handling of the surface components in particular the LED emitters as any pressure may result in damage and latent failures.

When cutting IP65 the ingress protection will be compromised please ensure that the assembly is re-sealed accordingly in order to maintain the IP rating

Installation notes:

To achieve a consistent luminous effect, each 5 metre should be connected to the power source.

To ensure long life we recommend that the strip is kept as cool as possible and environments where the temperature exceeds 40°C should be avoided

Drive & Control:

For control solutions please refer to our range of controllers and drive options which include DMX, RF Wireless, WiFi. More information may be found at http://www.plusopto.co.uk/led-controllers.html

Specifications may be subject to change without notice